DESCRIPTION: BEAMLINE ASSY, PXIE - This assembly is a collection of the the beamline components for Project X Injector Experiment (PXIE)
CATEGORY: BEAMLINE PROJECT: Project X Injector Experiment

REV	REVISION CONTROL DOCUMENT	DATES	SIGNATURES
-	F10001776---RCD		DRAWN
			APPROVED

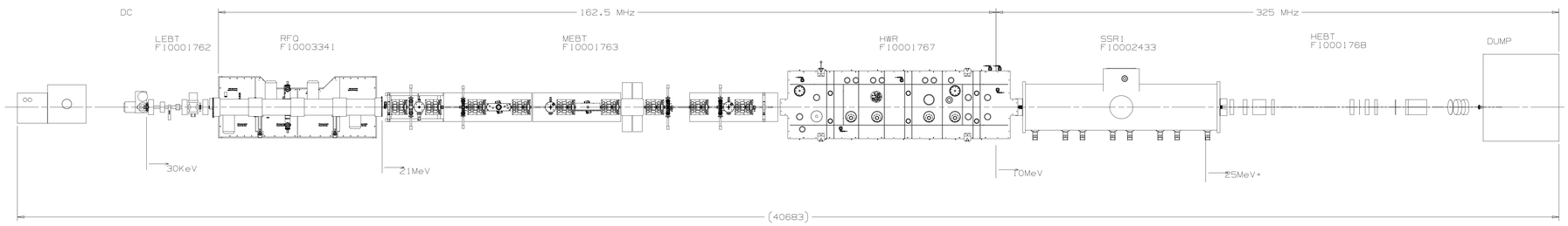

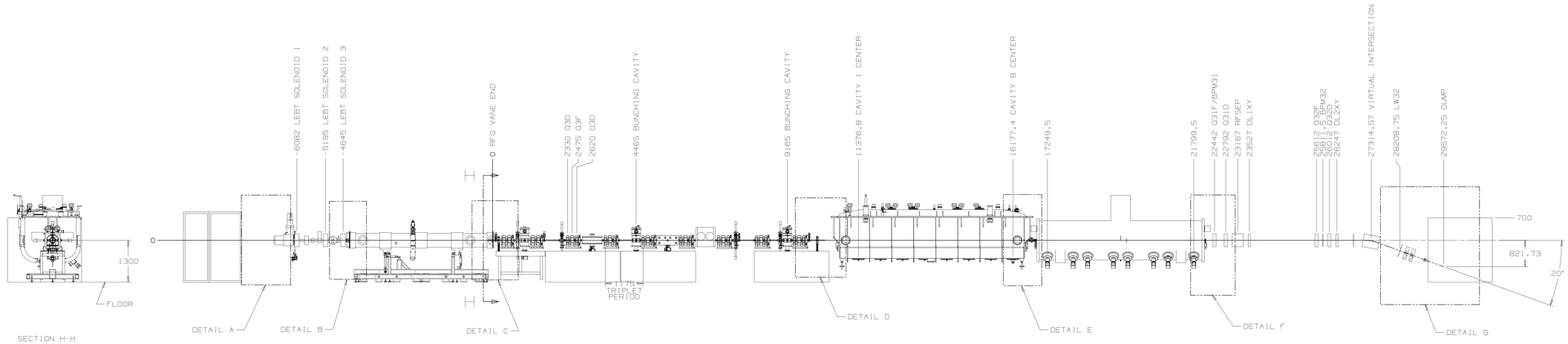

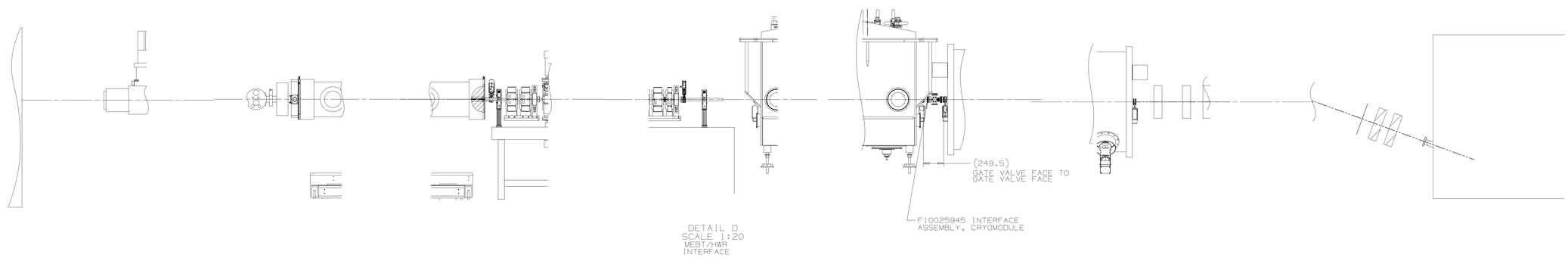

NOTES (UNLESS OTHERWISE SPECIFIED):

1. THIS DRAWING SHOWS BEAMLINE COMPONENTS FOR PXIE, AN INTEGRATED SYSTEMS TEST FOR THE PIP-II FRONT END

DRAFT, AS OF DEC 22, 2015

UNLESS OTHERWISE SPECIFIED				
±X	±X.X	±X.XX	±X/X	±X°
X	0.3	0.12	N/A	1°

BREAK ALL SHARP EDGES 0.5 MAX.
DO NOT SCALE DRAWING
DIMENSIONS BASED ON ASME Y14.5M-2009
MAX. ALL MACH SURFACES 3.2
DRAWING UNITS: MM

DRAWN	J.KURNAT	DATE	14-May-2014
CHECKED		DATE	
APPROVED		DATE	
USED ON	F10001748		
MATERIAL	-		

GROUP: Technical Division - Design and Drafting CAGE CODE: DUSR6

FERMI NATIONAL ACCELERATOR LABORATORY
UNITED STATES DEPARTMENT OF ENERGY

NAME: BEAMLINE ASSY, PXIE

SCALE	SIZE	DRAWING NUMBER	SHEET	REV
1:1 AS SHOWN	A0	F10001776	1 OF 1	-